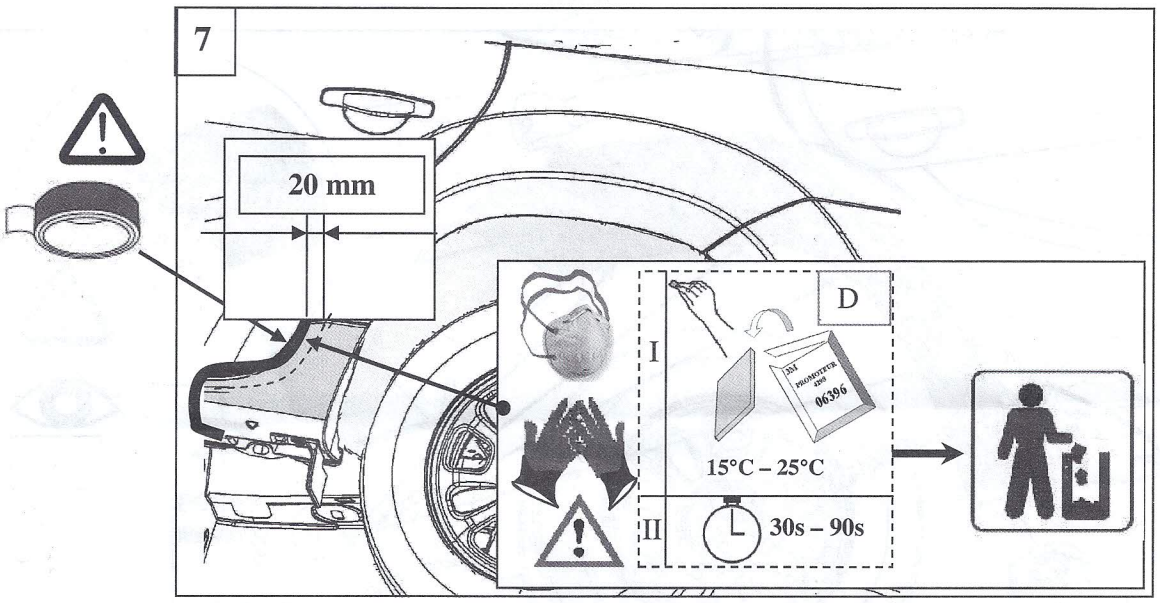
7
20 mm
D
I
15°C – 25°C
II
30s – 90s

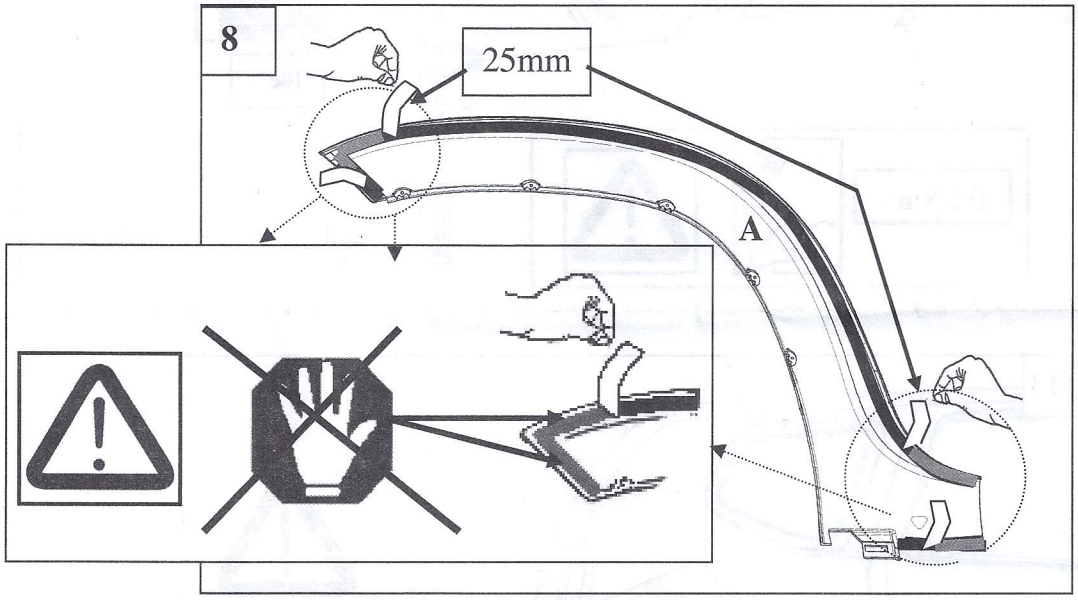
8
25mm
A

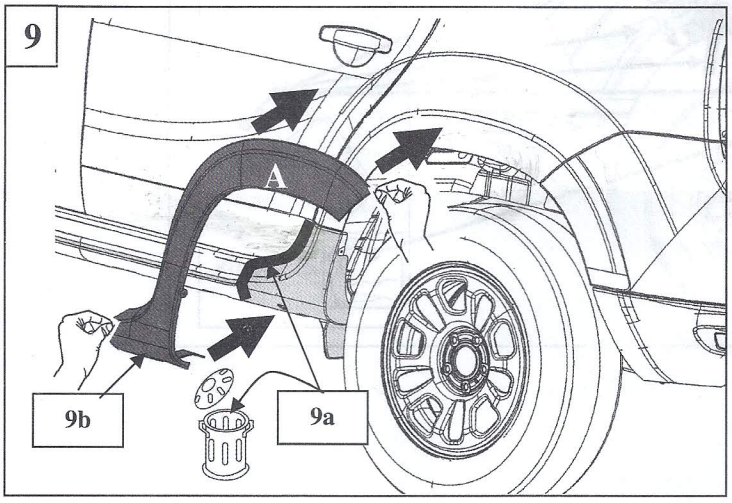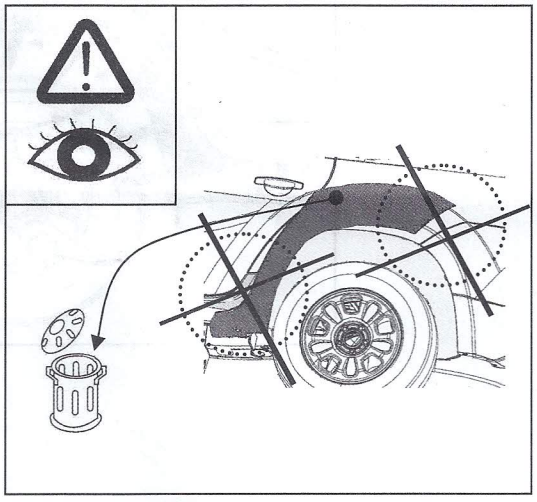
9
A
9b
9a